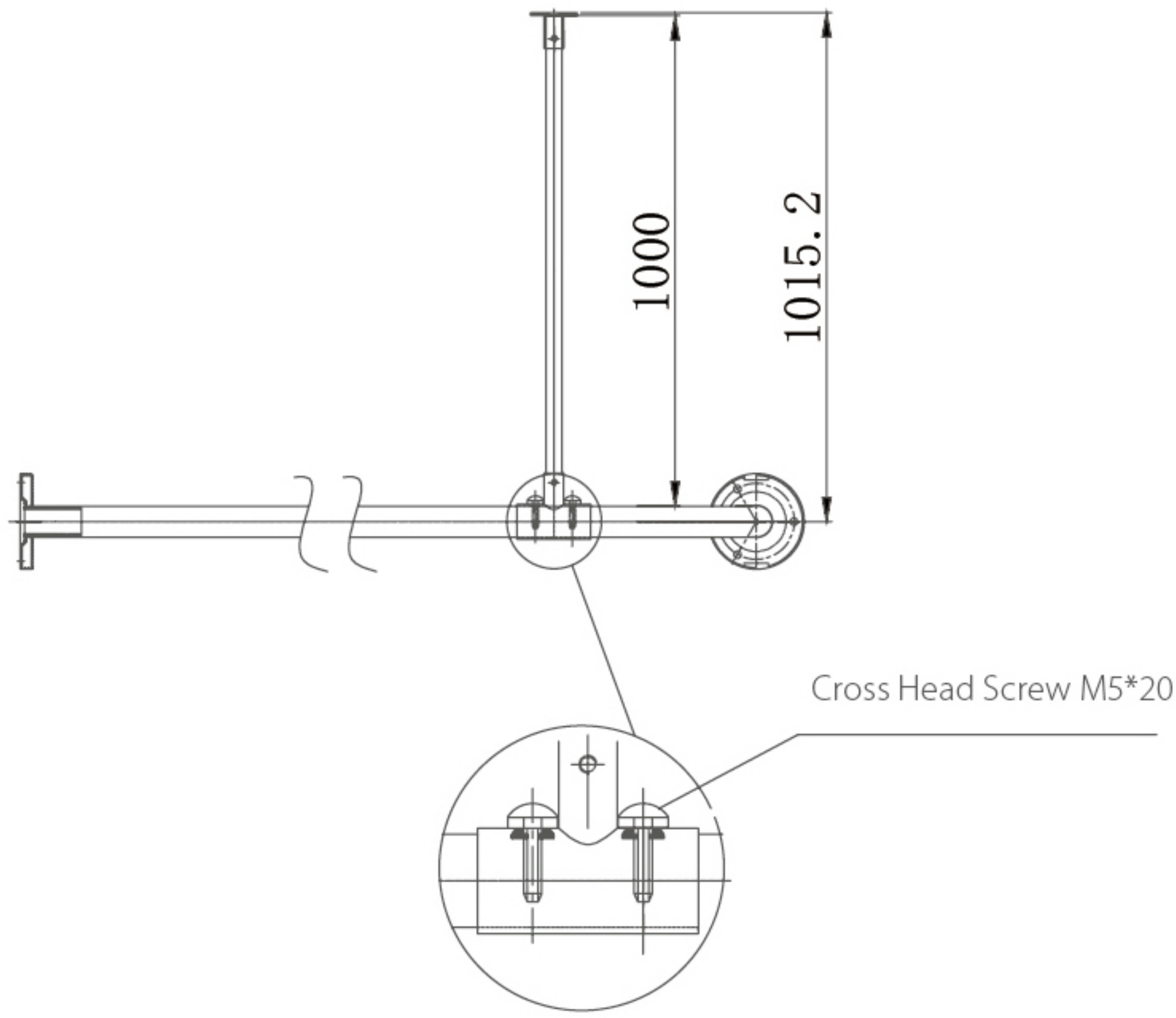
1000
1015.2
Cross Head Screw M5*20

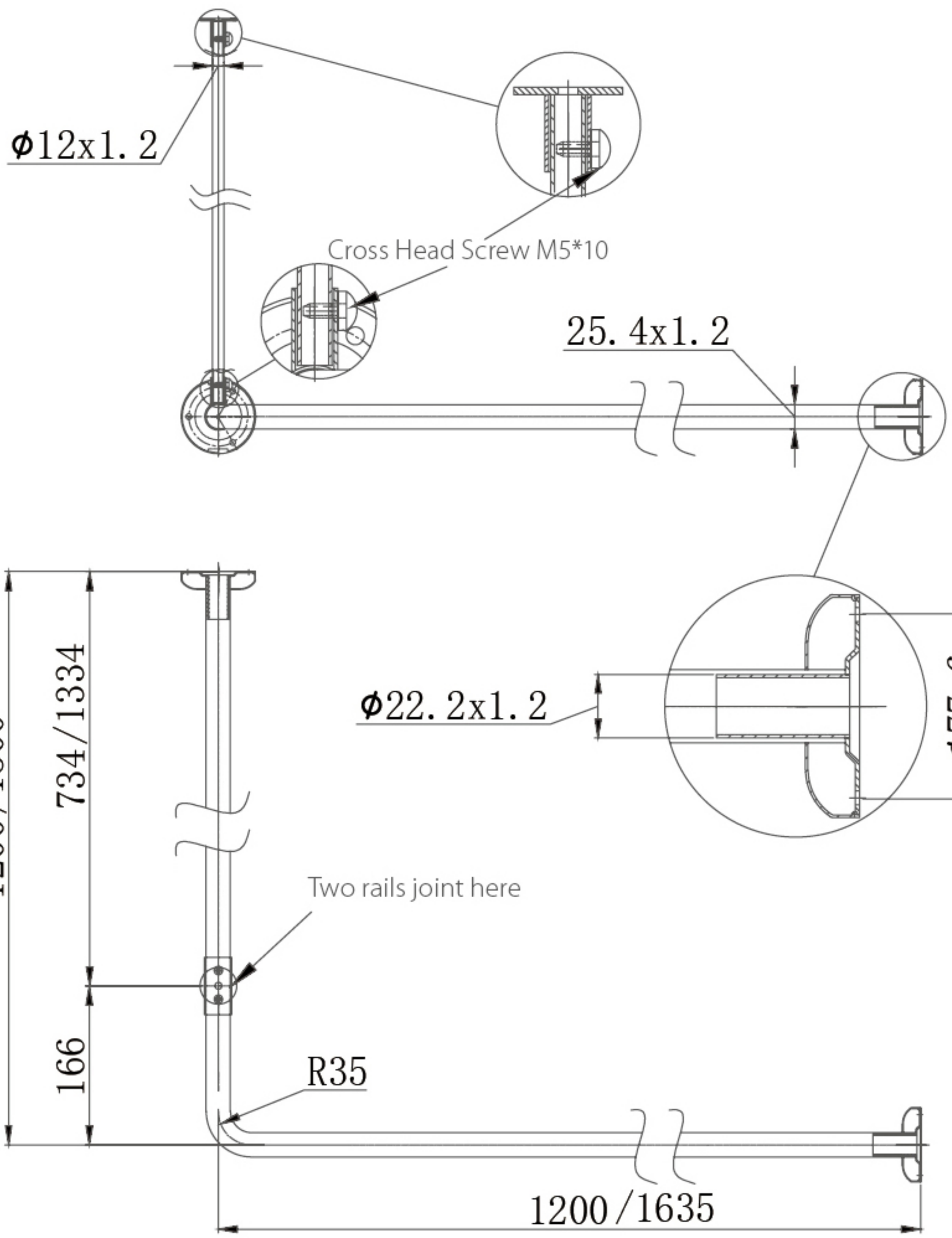
Φ12x1.2
Cross Head Screw M5*10
25.4x1.2
Φ22.2x1.2
Φ77.6
1200/1500
734/1334
Two rails joint here
166
R35
1200/1635