MOBI CARE L SHAPE SHOWER RAIL
TP G22L

SPECIFICATIONS

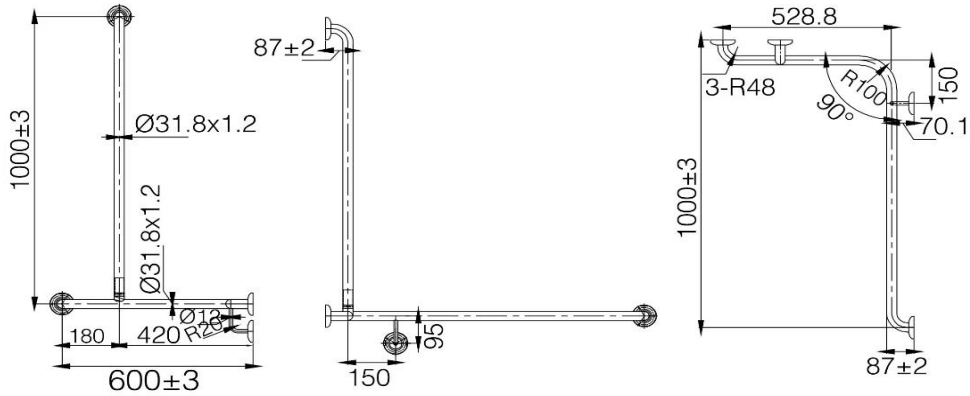

Left or Right Hand Available
304 Grade Stainless Steel
Complies with AS1428.1 requirements

WARRANTY INFORMATION:

2 Year Replacement Parts or Product
All products have a full 1 year in house labour warranty from date of purchase (Excluding Seat and Hinges)

ZENMO
Zen-inspired, Modern Living

ADDRESS: 42 Castro Way, Derrimut VIC 3026
PHONE: (03) 8390 6300
OFFICE: ect_sales@outlook.com
SERVICE: ect_service@outlook.com
WEBSITE: www.zenmo.com.au