ZENMO

SPECIFICATIONS

WB 5446W, WB SHROUD-5446W

VOLA wall hung basin.

PRODUCT



WIDTH	DEPTH
560mm	430mm
HEIGHT	**CAPACITY**
400mm	6.5L

DIMENSIONS, MM

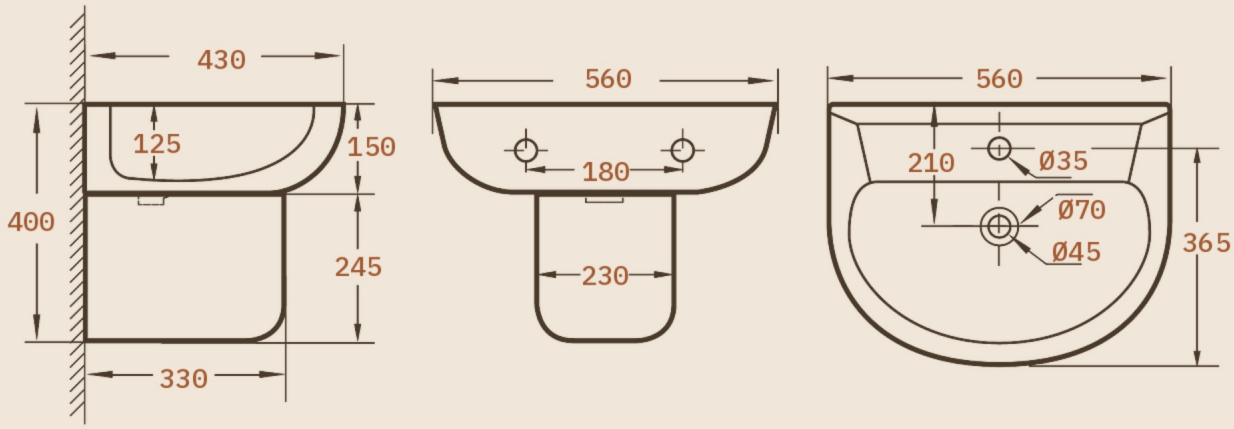

DETAILS

Material: vitreous china
Finish: gloss white
Weight: 18kg
Tap holes: 1 or none

FITTING

180mm between the 2 basin fixing holes
190mm between the 2 shroud fixing holes
45mm from the top of the shroud to the holes
Waste: 32mm with overflow, not included
Can be installed to comply with AS1428.1

WARRANTY

15 years replacement warranty on ceramic.
1 year in-house labour from the date of purchase.

CLEANING AND MAINTENANCE

Clean with mild detergent and water on a soft cloth.
Avoid waxes, solvents, abrasives, acids and other chemical-based cleaners.
The warranty is void if damage is caused by unsuitable cleaning products.

ADDRESS
42 Castro Way, Derrimut VIC 3026

PHONE
(03) 8390 6300

EMAIL
sales@zenmo.com.au

WEBSITE
www.zenmo.com.au